ECE 477 LAB 6

1) In the below figure a half adder is shown. Design the below adder and then do related simulations.

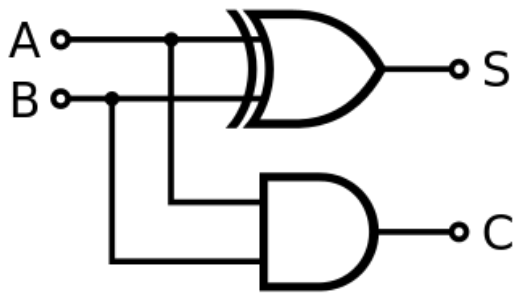

Figure-1 : A Half adder (*https://en.wikipedia.org/wiki/Adder_(electronics***))**

2) In the below figure a full adder is shown. Design the below adder and then do related simulations. Use half adders as component.

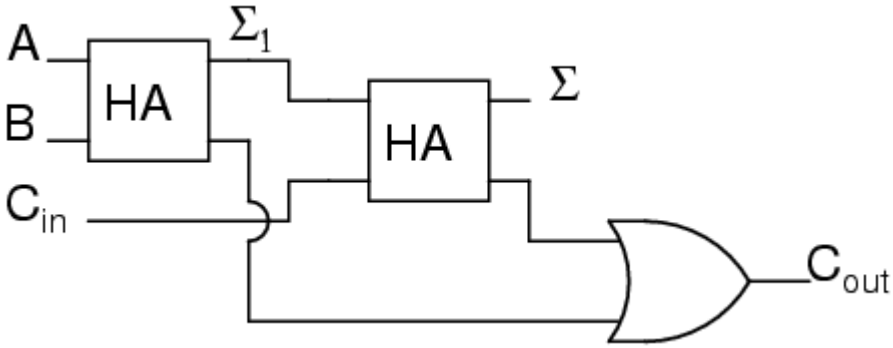

Figure-2 : Full adder by using Half adders

(https://www.ibiblio.org/kuphaldt/electricCircuits/Digital/DIGI_9.html#xtocid111047)

3) Design a 2 bit adder by using Full adders as component. Do related simulations.

<u>Homework</u>

1) Design a 3-to-8 decoder by using 2-to-4 decoders. Implement f(x,y,z) =∑(1,5,6,7) by using this 3-to-8 Decoder.
2) Design a 4-to-16 decoder by using 3-to-8 decoders. Implement f(x,y,z,t) =∑(0,1,8,9,10,11) by using this 4-to-16 decoder.
3) Design a 8-to-1 multiplexer by using 4-to-1 multiplexers and 2-to-1 multiplexer. Implement f(x,y,z) =∑(1,5,6,7) by using this 8-to-1 multiplexer.
4) Implement a 4-to-1 multiplexer by using 2-to-4 decoder and necessary logic gates.
5) Design a 16-to-1 multiplexer by using 8-to-1 multiplexers and 2-to-1 multiplexer. . Implement f(x,y,z,t) =∑(0,1,8,9,10,11) by using this 16-to-1 multiplexer.